AMANO McGANN® PARKING SOLUTIONS

AGP-4300

ExpressParc®

Credit Card Only Central Pay Station

The AGP-4300 Series ExpressParc Credit Card Only Central Pay Station is typically located at a central location within the parking facility. The system accepts entry tickets, expired exit tickets, validated tickets, and mag-stripe validation coupons, calculates the parking fee, accepts and processes the credit card, prints and issues a receipt on request, and issues a paid exit ticket.

Central Credit Card Only Pay Station

AGP-4300

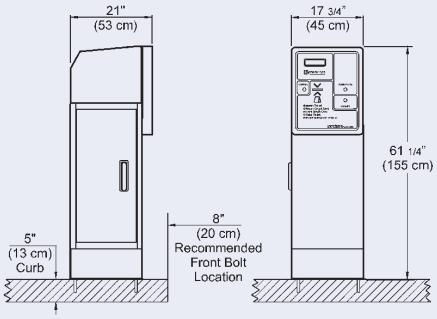

BOLT LAYOUT

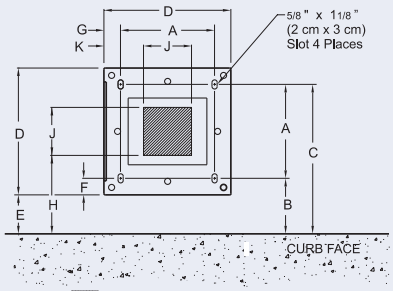

CONFINE RIGID CONDUIT NO MORE THAN 2" (5 cm) HIGH IN THIS AREA.

A= 11 3/4"	(30 cm)	F= 3"	(8 cm)
*B= 8"	(20 cm)	G=3"	(8 cm)
*C= 19 3/4"	(50 cm)	*H= 10 5/8"	(27 cm)
D= 17 3/4"	(45 cm)	J= 6"	(15 cm)
*E= 5"	(13 cm)	K= 5 7/8"	(15 cm)

* RECOMMENDATION ONLY. INSTALLATION REQUIREMENTS MAY VARY.

FEATURES

Greater throughput at exit—reduces traffic congestion in exit lanes

Secure unit—cash is neither collected nor dispensed

Large selection of financial processors supported

ADA compliant

Uses common hardware components (RWPV-based), fewer inventoried parts, reduced service training

Tamper-free operation

Easy payment procedure for customers

Allows easy analysis of activity & revenue

SPECIFICATIONS:

HOUSING

Construction:	Heavy duty 12 gauge steel construction, polyethylene cover over top mechanism, weather gasketed, lockable door
Dimensions:	61-1/4"h x 17-3/4"w x 21"d (155 cm x 45 cm x 53 cm)
Ticket throat height:	50-1/4" (128 cm)
Weight:	135 lbs. (61 kg)
Finish:	Standard yellow (RAL #1028) or white (RAL #9010) powder coat finish

ELECTRICAL

Power source:	120 - 220VAC, 50/60Hz
Power consumption:	Maximum 10 amps
Power reserve:	The clock and program data are protected for 4 years by the Lithium battery
Drying lamp:	120 VAC, 60W shock resistant lamp

ENVIRONMENT

Temperature:	-20°F ~ 120°F (-29°C ~ 49°C)
Humidity:	10% to 95% (non-condensing).
Heater:	Automatic Thermostat Controlled

TIME CONTROL

Real time clock synchronization with host computer

Quartz oscillated clock accurate within ± 3 seconds per week at 68°F to 86°F (20°C to 30C°).

Built-in crystal controlled perpetual calendar

Programmable Daylight Saving Time adjustment

TICKET SPECIFICATIONS

Credit card size:	2 1/8" (5.41 cm) wide x 3 3/8" (8.59 cm) long
Thickness:	(0.007") 0.188 mm
Magnetic stripe:	1/4" (6 mm) wide x 3 3/8" (86 mm) long

COMMUNICATIONS

Interfaces with on-line credit card host for rate programming, fee calculation, credit card processing, and journal logging.

OTHER FEATURES

Automatic dual ticket feed (total 10,000 fanfold tickets); ticket retraction, 9 x 7 electronic dot matrix printer; cartridge ribbon; self-sharpening ticket cutter. Built-in intercom (Aiphone compatible). Internal Memory Modules buffers minimum 999 transaction or error messages.

Ticket vault holds 1000 retracted and voided tickets. Graphic LCD display with programmable backlight. Built-in diagnostics test components, temperature, memory, ticket and communications.

Manufactured by Amano Cincinnati, Inc.'s Ohio factory, an ISO 9001:2000 registered facility.

Specifications are approximate and are subject to change without notice.

REPRESENTED BY:

VICTOR LIBERATOR TIME SYSTEMS, INC.
40 Gardenville Parkway, Buffalo NY 14224
Phone: (716) 656-5700 Fax: (716) 656-2099
Website: www.liberatortime.com

AMANO McGANN®

Corporate Headquarters *651 Taft Street NE, Minneapolis, MN 55413*
Tel: (612) 331-2020 www.amanomcgann.com

©2007 Amano McGann, Inc. All rights reserved. LP-AGP4300 11/07